Features

- 15”- 21.5” Active Max TFT LCD Display
- NEMA 4X / Waterproof Stainless Steel Enclosure
- Optional 5-Wire Resistive Touch Screen
- Integrated VGA Extender
- Transmission length up to 330meters(1,000ft) over CAT5e cable
- Adjustable equalization and gain control
- De-skew compensation available for RGB delay control

RS-232 Touch

VGA Input

NEMA 4X

ADM-5815AX, ADM-5817AX, ADM-5819AX, ADM-5821AX

Specifications	ADM-5815 AX	ADM-5817 AX	ADM-5819 AX	ADM-5821AX
LCD Display				
Display Size (Diagnol)	15 inch	17 inch	19 inch	21.5 inch
Resolution	1024 x 768	1280 x 1024	1280 x 1024	1920 x 1080
Backlight Lifetime (Hours)	30,000	50,000	50,000	50000
Visual Characteristics				
Colors	16.7 million	16.7 million	16 Million	16.7 million
Aspect ratio	4:3	5:4	4:3	16:9
Viewing angle (V/H)	140° / 160°	140° / 160°	178º / 178º	178° / 178°
Response time(Typical)	8 ms	30 ms	20 ms	14 ms
Pixel Pitch(mm)	0.264 x 0.264	0.264 x 0.264	0.294 x 0.294	0.248 x 0.248
Contrast ratio	700 : 1	800:1	700:1	1000 : 1
Brightness	300 nits	350 nits	300 nits	250 nits
Input Interface				
VGA	Yes	Yes	Yes	Yes
DVI	N/A	N/A	N/A	N/A
HDMI	N/A	N/A	N/A	N/A
Display Port	N/A	N/A	N/A	N/A
CVBS	N/A	N/A	N/A	N/A
YPbPr	N/A	N/A	N/A	N/A
Touch Screen				
Technology	5 Wire Resistive	5 Wire Resistive	5 Wire Resistive	5 Wire Resistive
Touch rating	35 Million Touches	35 Million Touches	35 Million Touches	35 Million Touches
MTBF	490,000 hours	490,000 hours	490,000 hours	490,000 hours
Interface	RS-232, USB	RS-232, USB	RS-232, USB	RS-232, USB
Driver	WinXP Pro, Win7 Pro, Win Embeded 7	WinXP Pro, Win7 Pro, Win Embeded 7	WinXP Pro, Win7 Pro, Win Embeded 7	WinXP Pro, Win7 Pro, Win Embeded 7
Enclosure				
Color	Stainless Steel	Stainless Steel	Stainless Steel	Stainless Steel
Protection	Meets NEMA 4X	Meets NEMA 4X	Meets NEMA 4X	Meets NEMA 4X
Power/Thermal Specs.				
Power Requirement (Max)	110VAC/0.14A, 220VAC/0.07A 24VDC/0.63A	110VAC/0.16A, 220VAC/0.08A 24VDC/0.63A	110VAC/0.16A, 220VAC/0.08A 24VDC/0.75A	110VAC/0.2A, 220VAC/0.1A 24VDC/0.9A
Power Consumption (Max)	15W	15W	18W	21W
Heat Dissipation	52 BTU/hr	52 BTU/hr	62 BTU/hr	74 BTU/hr
Physical Information				
Mounting	Pedestal, VESA, Wall and Ceiling mount, Benchtop	Pedestal, VESA, Wall and Ceiling mount, Benchtop	Pedestal, VESA, Wall and Ceiling mount, Benchtop	Pedestal, VESA, Wall and Ceiling mount, Benchtop
Net Weight	27 Lbs / 12.24 Kg	29 Lbs / 13.15 Kg	32 Lbs / 14.51 Kg	
Physical Dimension (WxHxD)	14.51 x 12.42 x 4.09 inch 368.6 x 315.5 x 103.9 mm	15.88 x 14.07 x 4.36 inch 403.4 x 357.4 x 110.7 mm	17.8 x 15.19 x 4.4 inch 452.1 x 385.8 x 111.8 mm	
Environmental				
Operating Temp	0-50ºC (32~122ºF)	0-50ºC (32~122ºF)	0-50ºC (32~122ºF)	0-50ºC (32~122ºF)
Storage Temp	-20~60ºC (-4~140ºF)	-20~60ºC (-4~140ºF)	-20~60ºC (-4~140ºF)	-20~60ºC (-4~140ºF)
Relative Humidity	0~95%	0~95%	0~95%	0~95%
Rating	N/A	N/A	N/A	N/A
Certification	N/A	N/A	N/A	N/A

ADM-5815 / 5817 / 5819 / 5821AX Series Line Drawing

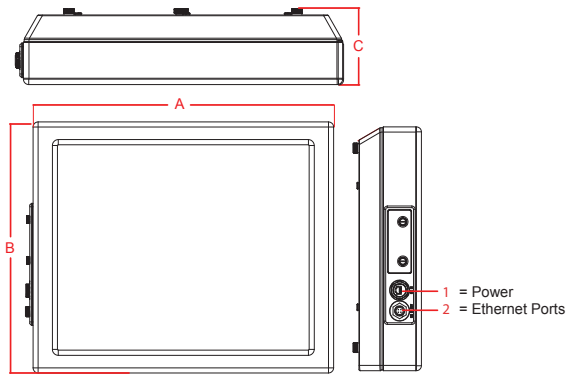

	ADM-5815 AX	ADM-5817 AX	ADM-5819 AX	ADM-5821 AX
A	14.51 inch / 368.5 mm	15.88 inch / 403.4 mm	17.8 inch / 452.1 mm	
B	12.42 inch / 315.5 mm	14.07 inch / 357.4 mm	15.19 inch / 385.8 mm	
C	4.09 inch / 103.9 mm	4.36 inch / 110.7 mm	4.4 inch / 111.8 mm	

1 ARP 1700 Series
2 ARP 2200 Series
3 ARP 3600 Series
4 ARP 5500 Series
5 AMA Series
6 ADM 1500 Series
7 ADM 1800 Series
8 ADM 5800 Series
9 ARD 1000 Series
10 AVW Series
11 BoxPC Series
12 Thin Clients Series
13 AMS Series
14 MPC Series
15 RS Series

Copyright © Arista All rights reserved! Subject to technical modifications!

ARISTA™
Talk to us. We listen.

ADM - 5800 Series
Ruggedized Industrial LCD Display

Features

- 42" Active Max TFT LCD Display
- Optional IR Touch Screen
- NEMA 4 / NEMA 4X Enclosure
- Integrated VGA Extender
- Transmission length up to 330meters(1,000ft) over CAT5e cable
- Adjustable equalization and gain control
- De-skew compensation available for RGB delay control

RS-232 Touch

VGA Input

NEMA 4X

ADM-5842AX

Specifications	ADM-5842AX-005
LCD Display	
Display Size (Diagnol)	42 inch
Resolution	1920 x 1080
Backlight Lifetime (Hours)	50,000
Visual Characteristics	
Colors	1073 Million
Aspect ratio	16:9
Viewing angle (V/H)	178° / 178°
Response time(Typical)	8 ms
Pixel Pitch(mm)	0.4845 x 0.4845
Contrast ratio	4000 : 1
Brightness	500 nits
Input Interface	
VGA	Yes
DVI	Yes
HDMI	N/A
Display Port	N/A
CVBS	N/A
YPbPr	N/A
Touch Screen	
Technology	Infrared
Touch rating	N/A
MTBF	N/A
Interface	RS-232, USB
Driver	WinXP Pro, Win7 Pro, Win Embedded 7
Enclosure	
Color	Stainless Steel
Protection	Meets NEMA 4X
Power/Thermal Specs.	
Power Requirement (Max)	110va@ 2.2A, 220VAC@ 1.1A 24VDC @ 9.8A
Power Consumption (Max)	234W
Heat Dissipation	799 BTU/hr
Physical Information	
Mounting	VESA / Wall Mount
Net Weight	110 Lbs / 50 Kg
Physical Dimension (WxHxD)	42.87 x 27.29 x 5.38 inch 1089.0 x 693.05 x 136.1 mm
Environmental	
Operating Temp	0-50°C (32~122°F)
Storage Temp	-20~60°C (-4~140°F)
Relative Humidity	0~95%
Rating	N/A
Certification	N/A

Line Drawing

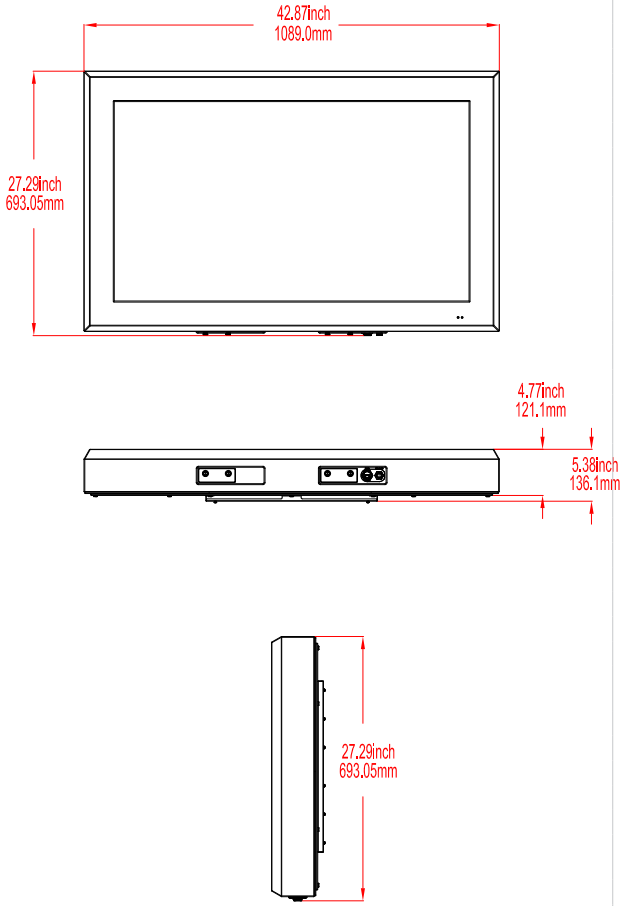

Ordering Information

	ADM-5817AX-005	ADM-5817AX-Z05	ADM-5817AX-004	ADM-5817AX-Z04
LCD Display	Standrd	Standrd	Standrd	Standrd
Touch Screen	5-Wire	N/A	5-Wire	N/A
Color	Stainless Steel	Stainless Steel	Stainless Steel	Stainless Steel
Power Supply	110/220VAC Input	110/220VAC Input	24VDC Input	24VDC Input
	ADM-5819AX-005	**ADM-5819AX-Z05**	**ADM-5819AX-004**	**ADM-5819AX-Z04**
LCD Display	Standrd	Standrd	Standrd	Standrd
Touch Screen	5-Wire	N/A	5-Wire	N/A
Color	Stainless Steel	Stainless Steel	Stainless Steel	Stainless Steel
Power Supply	110/220VAC Input	110/220VAC Input	24VDC Input	24VDC Input
	ADM-5821AX-005	**ADM-5821AX-Z05**	**ADM-5821AX-004**	**ADM-5821AX-Z04**
LCD Display	Standrd	Standrd	Standrd	Standrd
Touch Screen	5-Wire	N/A	5-Wire	N/A
Color	Stainless Steel	Stainless Steel	Stainless Steel	Stainless Steel
Power Supply	110/220VAC Input	110/220VAC Input	24VDC Input	24VDC Input
	ADM-5842AX-005	**ADM-5842AX-Z05**	**ADM-5842AX-004**	**ADM-5842AX-Z04**
LCD Display	Standrd	Standrd	Standrd	Standrd
Touch Screen	IR	N/A	IR	N/A
Color	Stainless Steel	Stainless Steel	Stainless Steel	Stainless Steel
Power Supply	110/220VAC Input	110/220VAC Input	24VDC Input	24VDC Input

Copyright © Arista All rights reserved! Subject to technical modifications!

Features

- Supports resolution up to WUXGA (1920x1200@60Hz)
- Transmission distance up to 330m/1,000 feet
- Supports RS-232 half-duplex
- Adjustable equalization on Remote Display
- Adjustable gain control on Remote Display
- Adjustable RGB delay/De-skew compensation
- Wall Mount / DIN-RAIL Mount

RS-232 Touch

VGA Input

Local Host VGA Transmitter

Local Host Transmitter

Role of usage	Local Transmitter
Video bandwidth	350MHz
Video support	VESA
Transmission	WUXGA [1920x1200] 330m (1,000ft) [CAT5e]
Audio support	N/A
RS-232 signal type	Half-duplex & baud rate
Input video signal	1.2 Volts (peak to peak)
Loop-out	1 VGA loop-out
ESD protection	[1] Human body model — ±15kV (air-gap discharge) & ±8kV (contact discharge)[2] Core chipset ±8kV
PCB stack-up	4-layer board [impedance control — differential 100O; single 50O]
Input	1x VGA, 1x RS-232 1x VGA, 1x RJ-45
Output	HD-15 (15-pin D-sub female)
VGA connector	WE/SS 8P8C with 2 LED indicators
RJ-45 connector	DE-9 (9-pin D-sub female)
Mechanical	
Physical Dimensions (W x H x D)	6.19 x 4.26 x 1.35 inch / 157.2 x 108.4 x 34.3 mm
Net Weight	2.33 Lbs / 1.06Kkg
Mounting	Wall Mount / DIN-RAIL Mount
Power supply	5V / 2A DC
Power consumption(Max)	5 W
Operating Temp	0 - 50°C (32 - 122°F)
Storage Temp	-20 - 60°C (-4 - 140°F)
Relative Humidity	20 - 90% RH (no condensation)

ARD-1000 Local Host Line Drawing

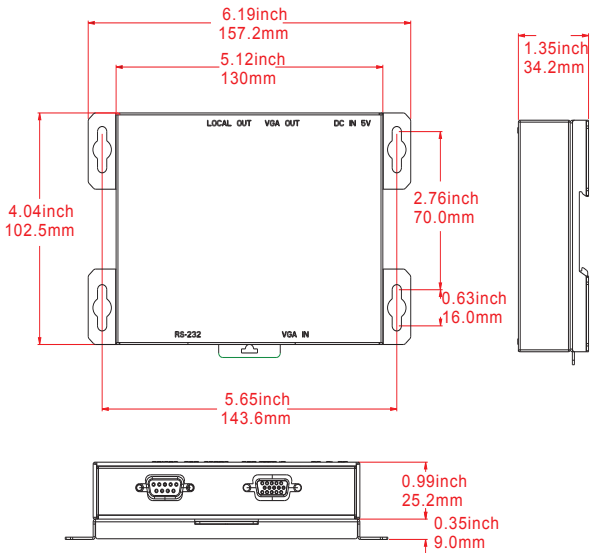

Wiring diagram

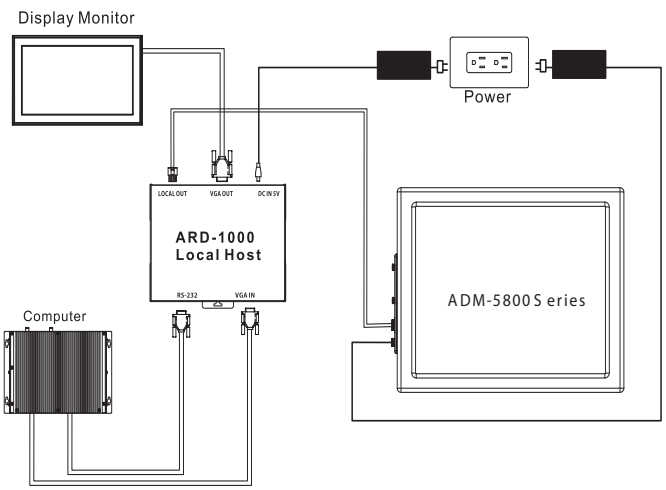

1 ARP 1700 Series
2 ARP 2200 Series
3 ARP 3600 Series
4 ARP 5500 Series
5 AMA Series
6 ADM 1500 Series
7 ADM 1800 Series
8 ADM 5800 Series
9 ARD 1000 Series
10 AVW Series
11 BoxPC Series
12 Thin Clients Series
13 AMS Series
14 MPC Series
15 RS Series

Copyright © Arista All rights reserved! Subject to technical modifications!

ADM-5815AX / ADM-5817AX / ADM-5819 / ADM-5821AX Pedestal Mount Bracket Assembly

XTM-001

ARP-5500AX/ADM-5800AX
Pedestal Mount Bracket As-

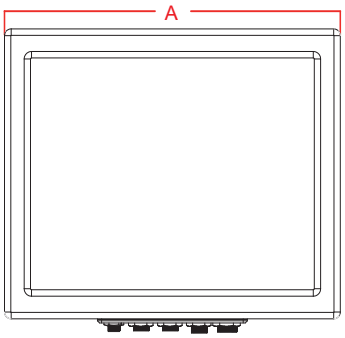

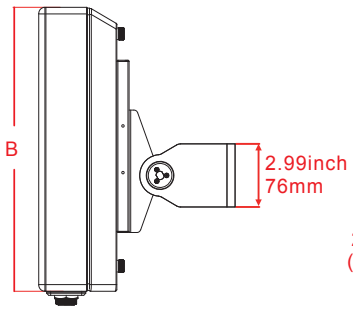

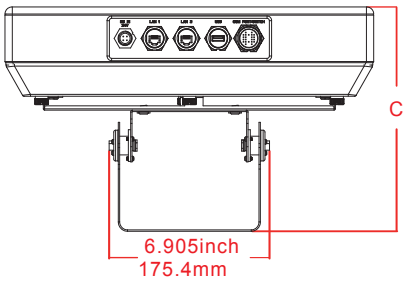

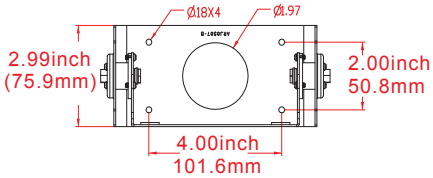

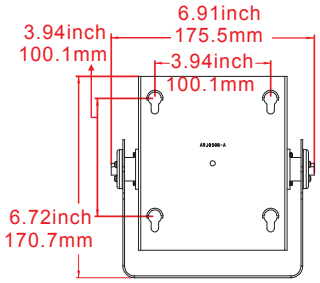

	ADM-5815 AX	ADM-5817 AX	ADM-5819 AX	ADM-5821 AX
A	14.51inch / 368.5mm	15.88inch / 403.3mm	17.80inch / 452.1mm	
B	11.80inch / 299.6mm	13.46inch / 341.8mm	14.60inch / 370.8mm	
C	9.21inch / 234.0mm	9.48inch / 240.8mm	9.52inch / 241.8mm	

ADM-5815AX / ADM-5817AX / ADM-5819 / ADM-5821AX VESA Mount Bracket Assembly

XVM-001

ARP-5500AX/ADM-5800AX
VESA Mount Bracket Assembly

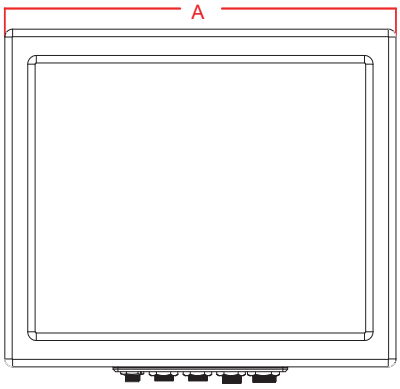

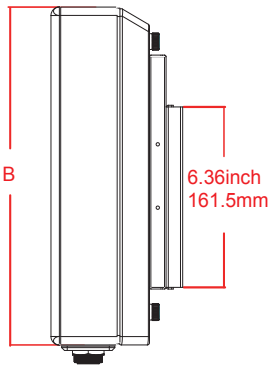

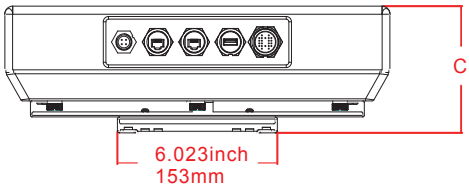

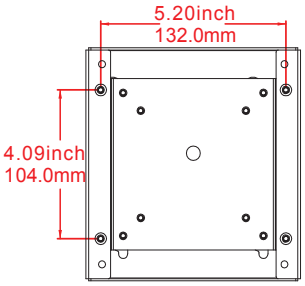

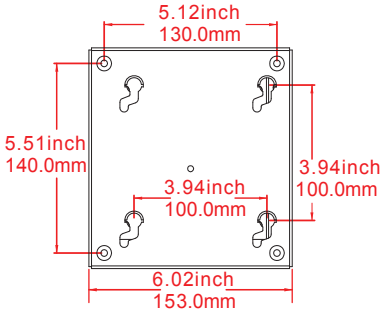

	ADM-5815 AX	ADM-5817 AX	ADM-5819 AX	ADM-5821 AX
A	14.51inch / 368.5mm	15.88inch / 403.3mm	17.80inch / 452.1mm	
B	11.80inch / 299.6mm	13.46inch / 341.8mm	14.60inch / 370.8mm	
C	4.69inch / 119.0mm	4.95inch / 125.8mm	4.99inch /126.8mm	

Copyright © Arista All rights reserved! Subject to technical modifications!

ADM-5815AX / ADM-5817AX / ADM-5819 / ADM-5821AX Wall Mount Bracket Assembly

XWM-001

ARP-5500AX/ADM-5800AX
Wall Mount Bracket Assembly

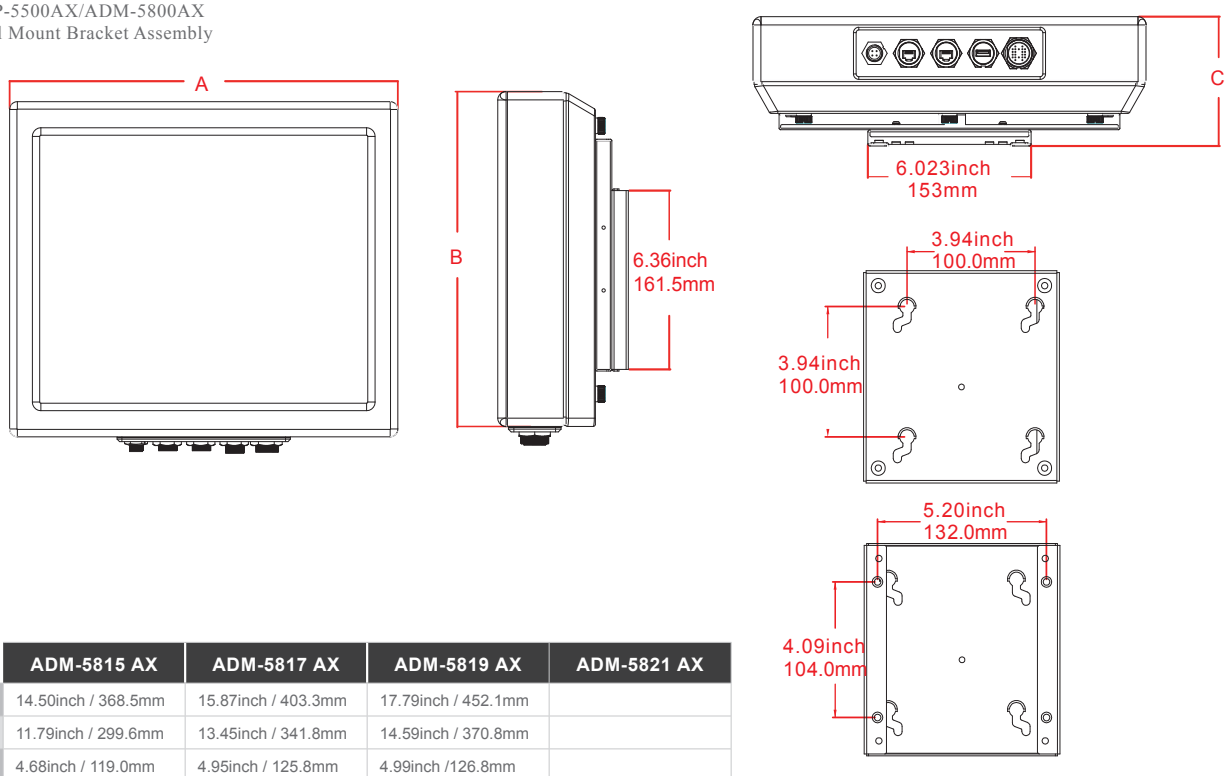

	ADM-5815 AX	ADM-5817 AX	ADM-5819 AX	ADM-5821 AX
A	14.50inch / 368.5mm	15.87inch / 403.3mm	17.79inch / 452.1mm	
B	11.79inch / 299.6mm	13.45inch / 341.8mm	14.59inch / 370.8mm	
C	4.68inch / 119.0mm	4.95inch / 125.8mm	4.99inch /126.8mm	

ADM-5815AX / ADM-5817AX / ADM-5819 / ADM-5821AX Ceiling Mount Assembly

XCM-001
ARP-5515AX/ADM-5815AX Ceiling Mount Assembly

XCM-002
ARP-5517AX/ADM-5817AX Ceiling Mount Assembly

XCM-003
ARP-5519AX/ADM-5819AX Ceiling Mount Assembly

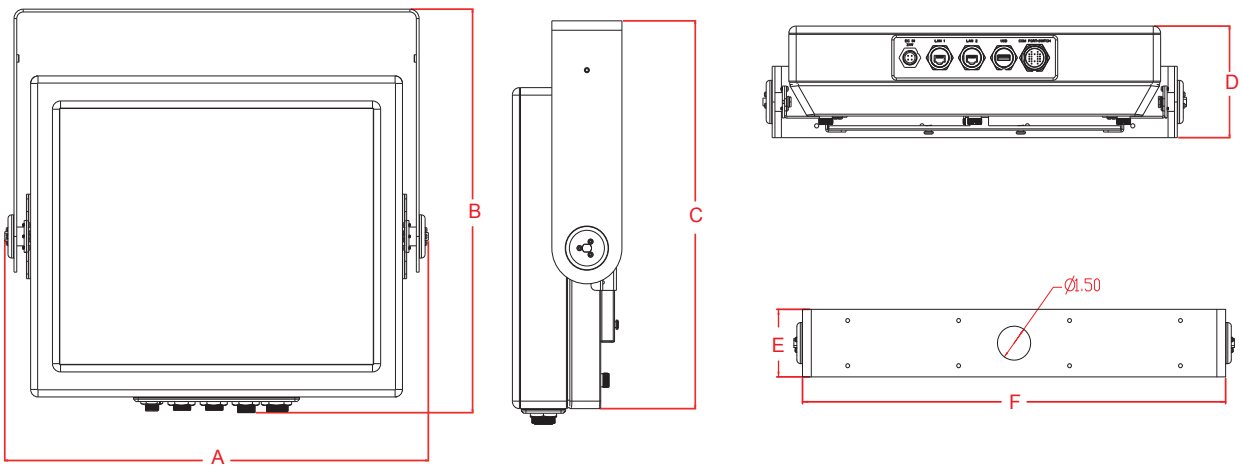

	ADM-5815 AX	ADM-5817 AX	ADM-5819 AX	ADM-5821 AX
A	16.79 inch / 426.4 mm	18.09 inch / 459.4 mm	19.86 inch / 504.4 mm	
B	15.30 inch / 388.6 mm	16.92 inch / 429.7 mm	18.05 inch / 458.5 mm	
C	14.64 inch / 371.8 mm	16.26 inch / 412.9 mm	17.39 inch / 441.8 mm	
D	4.41 inch / 112.0 mm	4.68 inch / 118.8 mm	4.72 inch / 119.8 mm	
E	2.99 inch / 76.0 mm	2.99 inch / 76.0 mm	2.99 inch / 76.0 mm	
F	16.00 inch / 406.4 mm	17.30 inch / 439.4 mm	19.07 inch / 484.4 mm	

1 ARP 1700 Series
2 ARP 2200 Series
3 ARP 3600 Series
4 ARP 5500 Series
5 AMA Series
6 ADM 1500 Series
7 ADM 1800 Series
8 ADM 5800 Series
9 ARD 1000 Series
10 AVW Series
11 BoxPC Series
12 Thin Clients Series
13 AMS Series
14 MPC Series
15 RS Series

Copyright © Arista All rights reserved! Subject to technical modifications!

ADM-5815AX / ADM-5817AX / ADM-5819 / ADM-5821AX Benchtop Stand Assembly

XDS-001
ARP-5515AX/ADM-5815AX Benchtop Stand Assembly

XDS-002
ARP-5517AX/ADM-5817AX Benchtop Stand Assembly

XDS-003
ARP-5519AX/ADM-5819AX Benchtop Stand Assembly

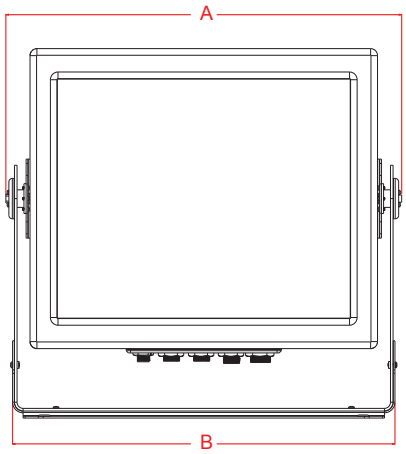

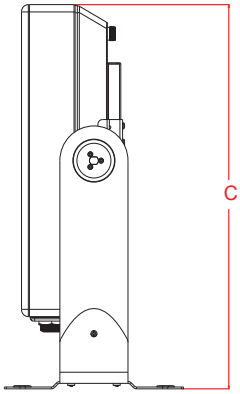

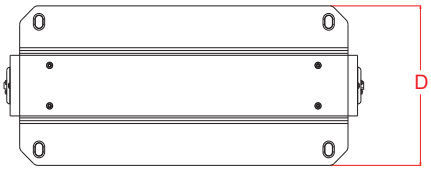

	ADM-5815 AX	ADM-5817 AX	ADM-5819 AX	ADM-5821 AX
A	16.79 inch /426.4 mm	18.09 inch / 459.4 mm	19.86 inch / 504.4 mm	
B	16.17 inch / 410.8 mm	17.47 inch / 443.8 mm	19.24 inch / 488.8 mm	
C	14.95 inch / 379.7 mm	16.57 inch / 420.9 mm	17.71 inch / 449.8 mm	
D	7.87 inch / 200.0 mm	7.87 inch / 200.0 mm	7.87 inch / 200.0 mm	

AWM-003 / XVM-003 Wall Mount Bracket

Features

- Supports VESA mounting standard
- Easy installation
- Easy release
- Fixed Mount
- Finish
  AWM-003 Black Color powder coated
  XWM-003 Stainless Steel

AWM-003 Line Drawing

ADM-5842 with AWM-003/XWM-003 Line Drawing

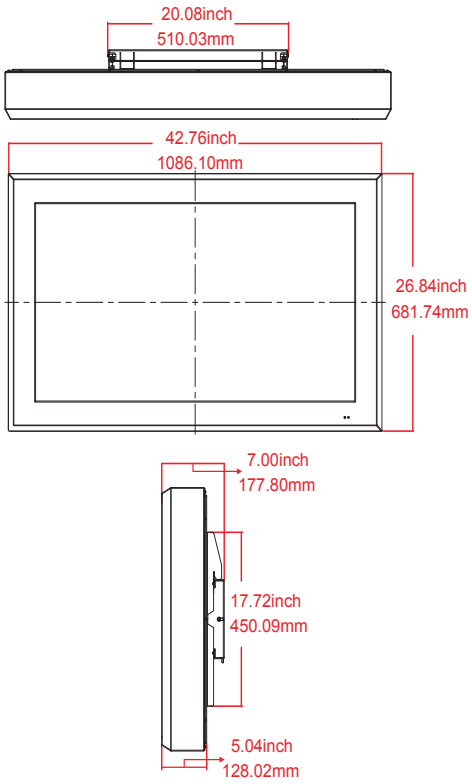

Copyright © Arista All rights reserved! Subject to technical modifications!